rexroth
A Bosch Company

Electro-hydraulic actuation for brake-by-wire applications HICBBW

- Series 1X
- Maximum operating pressure 210 bar
- Maximum control pressure 100, 160 bar
- Maximum flow rate 15 l/min at Δp = 7 bar

Features

- Space-saving, efficient brake control
- Infinitely variable brake pressure
- Efficient actuation thanks to proportional pressure reducing valves
- High braking force at low energy consumption
- Different circuit variants available
- Optional with T-override (HICBBW-3)
- Compliance with the EU-RoHs directive

Contents

Type code	2
Preferred types	2
Functional description	3
Technical data	4
Dimensions	6
Circuit example	9
Further documentation	10

Type code

01	02		03	04		05		06		07	08	09	10	11	12	13	14
HIC	**BBW**	**-**		**A**	**-**	**ST**	**-**	**1X**	**/**							**V**	*****

Valve type

01	Hydraulic Integrated Circuit	**HIC**

Application

02	Brake-by-wire (electro-hydraulic brake)	**BBW**

Construction

03	Single block	**1**
	Double block	**2**
	Double block with switching valve	**3**

Type of connection

04	Threaded connection, flat-sealing according to DIN 3852-2 (ISO 1179-2)	**A**

Block material

05	Steel	**ST**

Series

06	Series 10 to 19 (10 to 19; unchanged installation and connection dimentions)	**1X**

Maximum control pressure of the pressure reducing valve DRET5 (filter in **P**, see data sheet 64667)

07	Without valve configuration	**XXX**
	100 bar	**100**
	160 bar	**160**

Filter

08	Filter in **P**	**P**
	Filter in **A** and **P**	**A**

Voltage

09	12 V coil	**G12**
	24 V coil	**G24**

Manual override

10	**Without** manual override	**N0**
	With concealed auxiliary actuation device at switching valve (only possible for double block HICBBW-3)	**N9** [1]

Electrical connection[2]

11	Power connector 2-pin, DT 04-2P (DEUTSCH)	**K40**
	Power connector 2-pin, Junior-Timer (AMP)	**C4**

Sensor in measurement port MA and MB

12	**Without** sensor, measurement connections sealed pressure-tight	**XXX**
	PR4 sensor output signal 0.5 V ... 4.5 V	**–05**
	PR4 sensor output signal SENT as per SAE J2716	**–SE**

Sealing material

13	FKM (fluorine rubber)	**V**

14	Further details in plain text	*****

Preferred types

Type	Material Number
R930090008	HICBBW-1A-ST-1X/100PG12N0K40XXXV
R901551796	HICBBW-2A-ST-1X/100PG12N0K40XXXV
R901565781	HICBBW-2A-ST-1X/160PG12N0K40XXXV
R901502540	HICBBW-2A-ST-1X/100PG24N0K40XXXV
R901514433	HICBBW-3A-ST-1X/100PG24N0K40-05V

Notice

For valve types other than those listed in the data sheet, consultation is required.

1) Manual override only ON-OFF version.
2) Power sockets are not included in the scope of delivery and must be ordered separately, see data sheet 08006.

Functional description

With the electro-hydraulic actuation for brake-by-wire applications HICBBW, brake pressures can be infinitely regulated. With the direct-controlled proportional pressure reducing valve of the DRET5SK type in 3 way design, the control pressure can be set in proportion to the magnetic current. In case of a 0 setpoint or power failure, the minimum pressure is set. Actuation is done by a proportional magnet. The HICBBW-3 variant with additional switching valve also permits T-override of the DRET5 in the event of failure of the magnetic current. In this case, the connections **A** and **B** (DRET5 not actuated) can be pressurized via the **P2** connection (with valve KKDE switched).

Notice

Further information on the operation of the valves can be found in the corresponding data sheet:

- Proportional pressure reducing valve DRET5: 64667
- Switching valve KKDE: 18136-04

Notice

With the delivery of the HICBBW control block, Bosch Rexroth does not assume any system responsibility for the entire system.

Without sensor	With Sensor	Type Connection A, DIN 3852-2 (ISO 1179-2)	
HICBBW-1 – Single block			
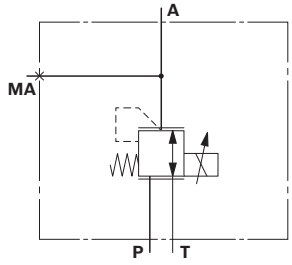	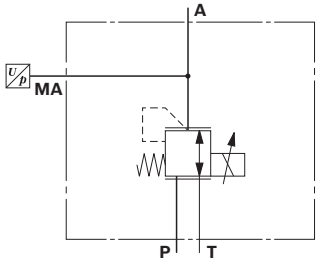	**T, P, A** **MA, MB**	G1/2 G1/4
HICBBW-2 – Double block			
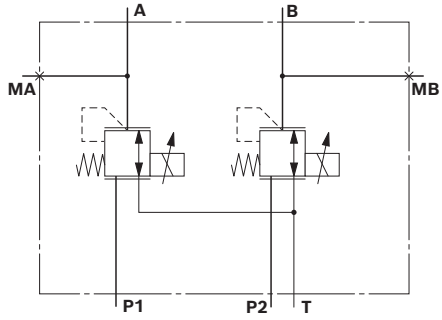	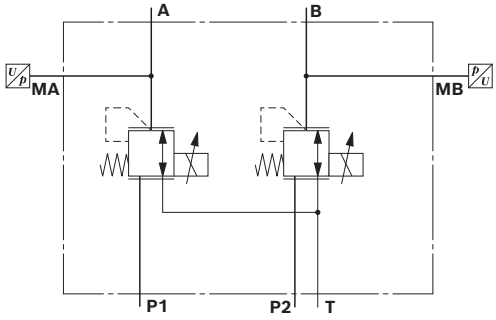	**T, P1, P2, A, B** **MA, MB**	G1/2 G1/4
HICBBW-3 – Double block with switching valve			
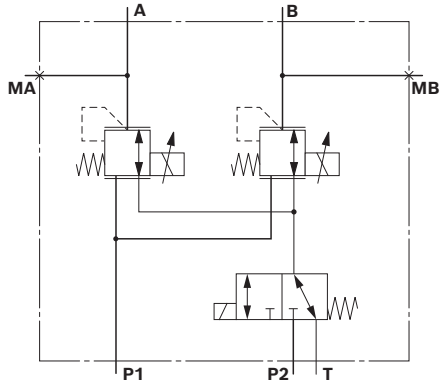	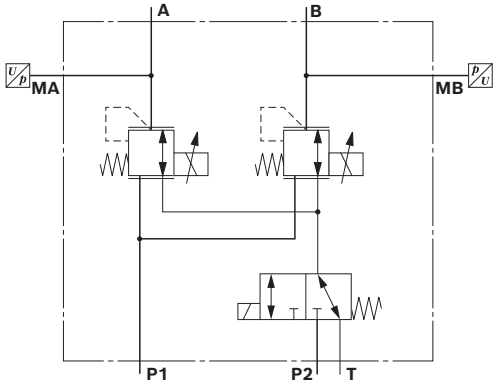	**T, P1, P2, A, B** **MA, MB**	G1/2 G1/4

A, B = control pressure connection
P1, P2 = supply
T = tank connection
MA, MB = measurement connection

Technical data

General				
Weight(approx.)[1]	Single block		kg	3.2
	Double block		kg	6.5
	Double block with switching valve		kg	7.6
Installation position				Any; the position of the electrical connection should preferably be changing down (with the valve in horizontal position or with the electrical connection pointing upwards, a minimum counter-pressure must be generated so that the valve remains filled with oil).
Ambient temperature range			°C	–30 ... +100
Salt spray test according to ISO 9227			h	144 (NSS - Testing)
Mesh size sleeve filter for proportional pressure reducing valve DRET5 (connection **A** and **P**)			µm	180

Hydraulic					
Maximum control pressure	Connection **A**	p_A	bar	100; 160	
Maximum inlet pressure	Connection **P**	p_E	bar	210 (250 bar including pressure peaks)	
Counter pressure	Connection **T**	p_T	bar	160	
Flow rate (Δp ≤ 7 bar)	**P** → **A**	$q_{v\ Nenn}$	l/min	15	
	A → **T**	$q_{v\ max}$	l/min	25	
Hydraulic fluid				See table on page 5	
Temperature range of hydraulic fluid			°C	–20 ... +80	
Viscosity range		ν	mm²/s	3.7 to 5	limited function
				5 to 400	full function
				400 to 20000	limited function
Maximum admissible degree of contamination of the hydraulic fluid Oil purity class as per ISO 4406 (c)				Class 20/18/15 [1]	

Electrical			
Voltage type			Direct current (DC)
Supply voltage	U	V	12; 24
Current, power consumption, coil resistance and other valve parameters			See data sheet for type DRET5SK (64667) and type KKDE (18136-04)
Control electronics (separate order)			Analog amplifier type RA, data sheet 95230
			Proportional amplifier type VT-SSPA1, data sheet 30116
			BODAS controller type RC, Data sheet 95204, 95205, 95206

Notice

- The technical data was determined at a viscosity of ν = 46 mm²/s (HLP46; 40±5 °C).
- For applications outside the values, please consult us!

1) The cleanliness classes specified for the components must be maintained in hydraulic systems. An effective filtration prevents faults and at the same time increases the service life of the components.
We recommend a filter with a minimum retention rate of $\beta_{10} \geqq 75$.

Hydraulic fluid

Hydraulic fluid		Classification	Suitable sealing materials	Standards	data sheet
Mineral oils		HL, HLP	FKM	DIN 51524	90220
Biodegradable	insoluble in water	HEES	FKM	ISO 15380	90221
	soluble in water	HEPG	FKM	ISO 15380	90221

Notice

- Further information and details on using other hydraulic fluids are available in the above data sheet or on request.
- Restrictions are possible with the technical valve data (temperature, pressure range, service life, maintanance intervals, etc.)!
- The flash point of the hydraulic fluid must be 40 K above the maximum solenoid surface temperature.
- **Biodegradable:** if biodegradable hydraulic fluids are used that are also zinc-dissolving, the may be an accumulation of zinc.

Dimensions

▼ **HICBBW-1 – Single block**

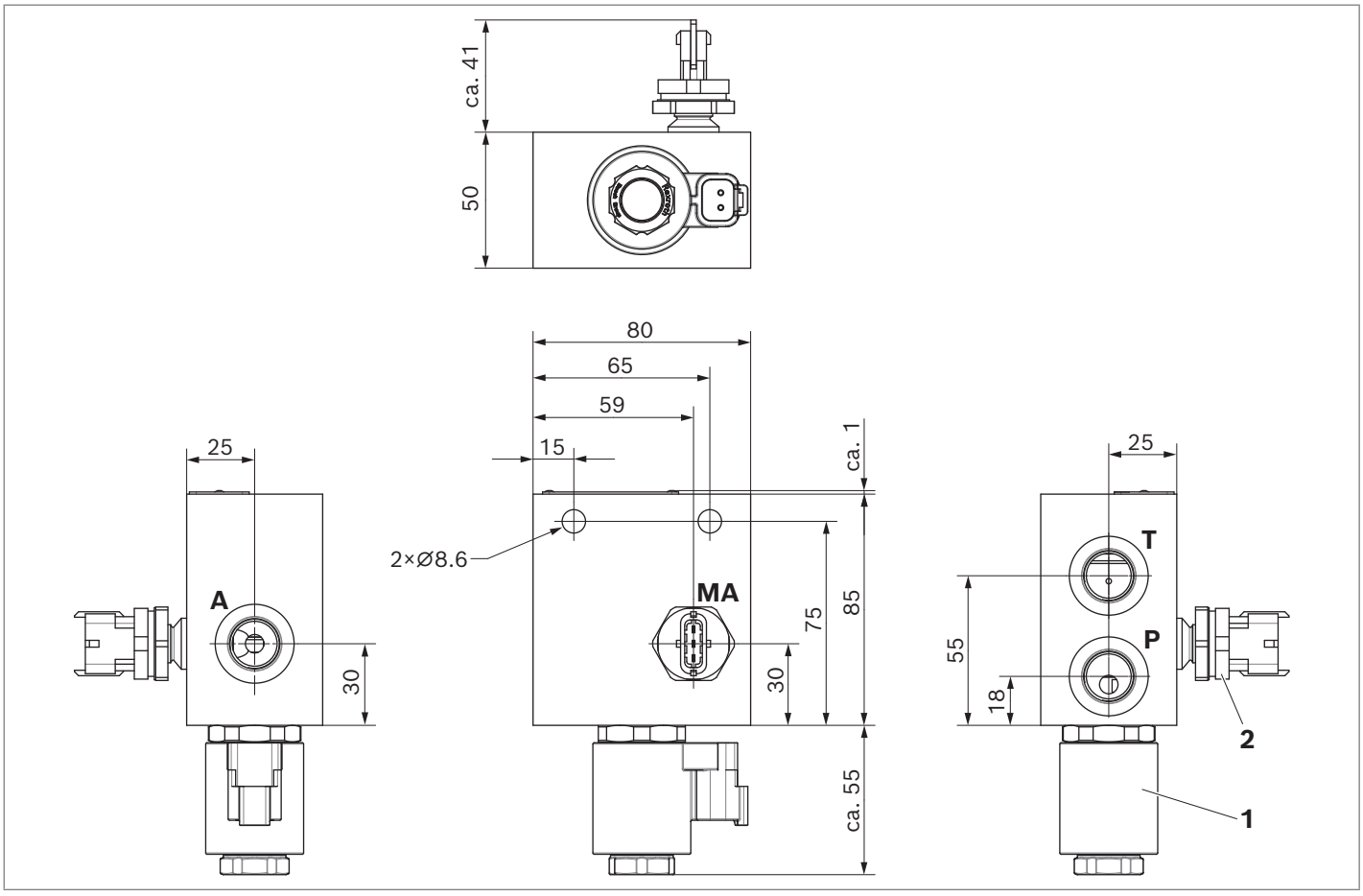

1 Proportional pressure relief valve DRET5SK, tightening torque M_A = 40+5 Nm

2 Pressure sensor PR4, tightening torque M_A = 35±5 Nm (optional)

Type Connection		
T, P, A	G1/2	ISO 1179-2
MA	G1/4	ISO 1179-2

▼ **HICBBW-2 – Double block**

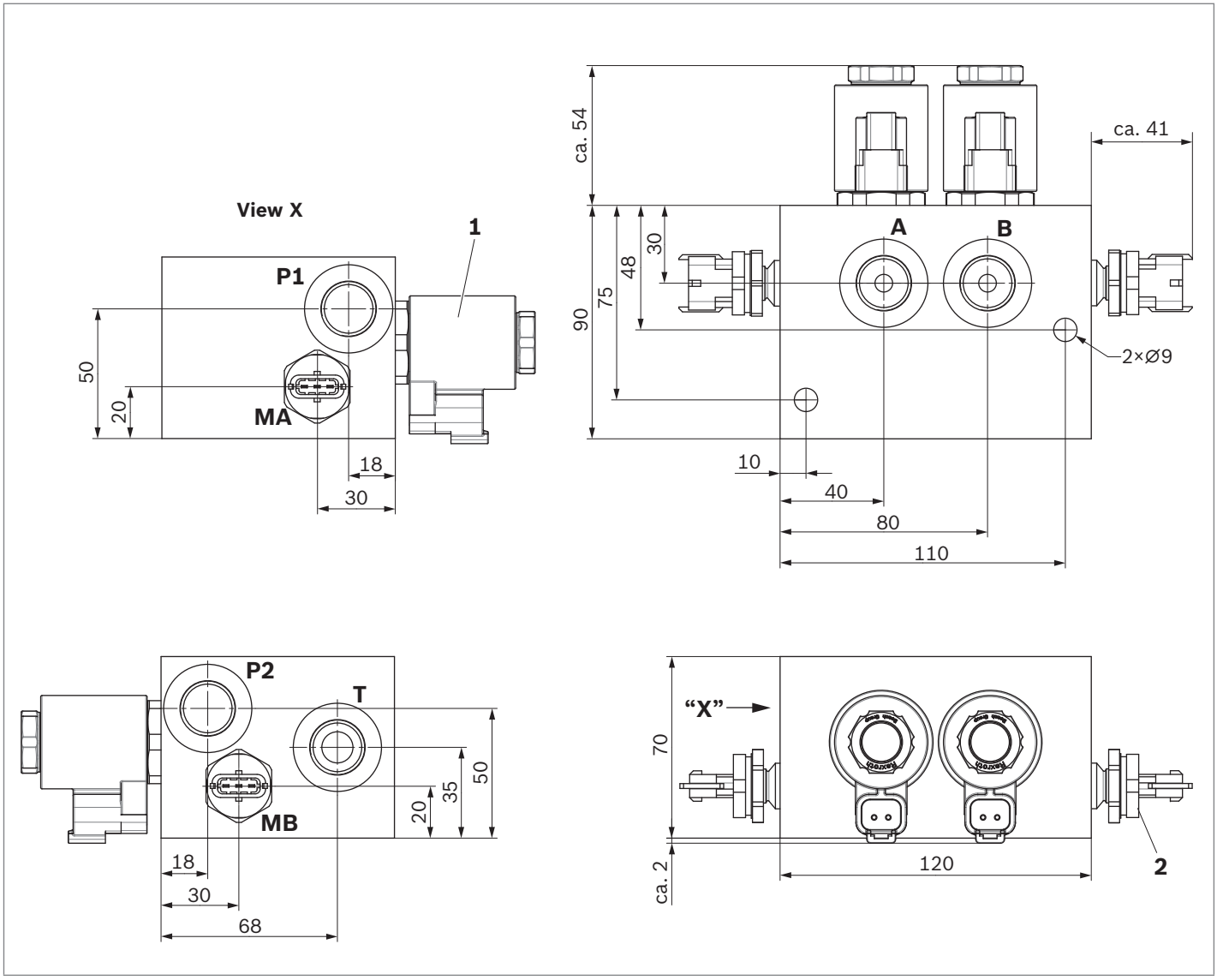

1 Proportional pressure relief valve DRET5SK, Tightening torque M_A = 40+5 Nm

2 Pressure sensor PR4, tightening torque M_A = 35±5 Nm (optional)

Type Connection		
T, P1, P2, A, B	G1/2	ISO 1179-2
MA, MB	G1/4	ISO 1179-2

▼ **HICBBW-3 – Double block with switching valve**

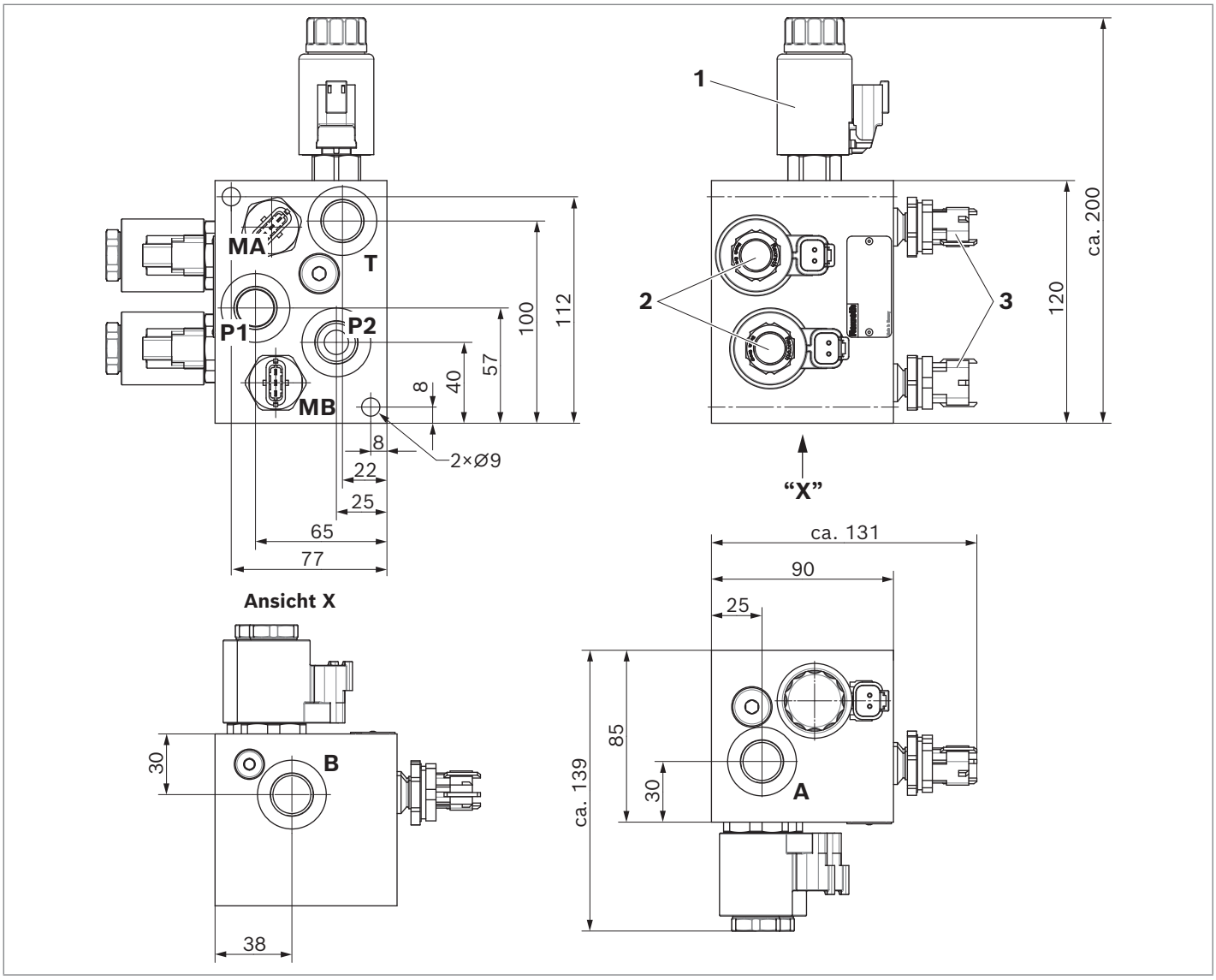

1 Switching valve KKDE; tightening torque M_A = 45+5 Nm
2 Proportional pressure relief valve DRET5SK,
Tightening torque M_A = 40+5 Nm
3 Pressure sensor PR4, tightening torque M_A = 35±5 Nm (optional)

Type Connection		
T, P1, P2, A, B	G1/2	ISO 1179-2
MA, MB	G1/4	ISO 1179-2

Circuit example

▼ **Structure of a brake-by-wire brake application with other necessary components**

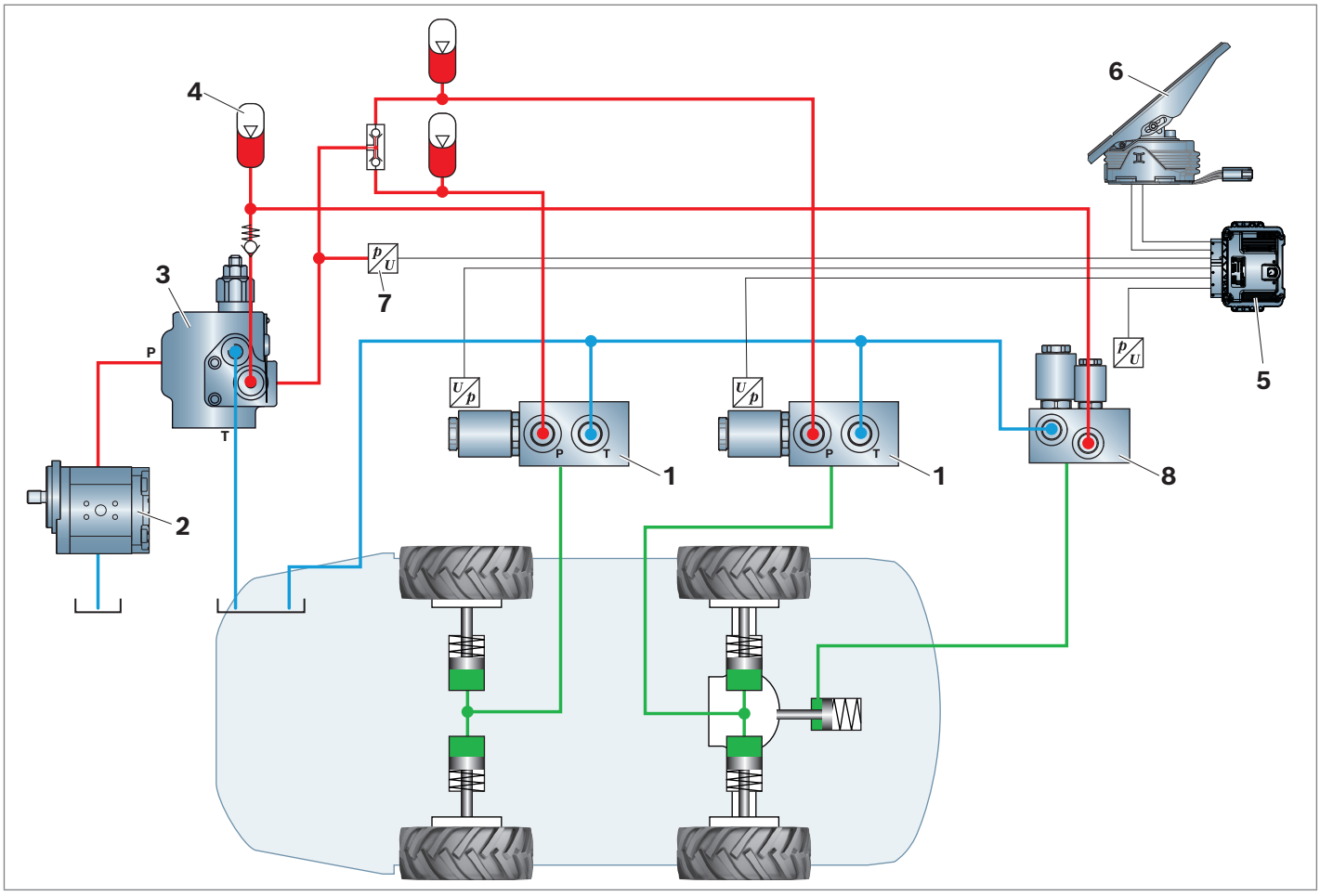

1 HICBBW-1 – single block
2 Constant pump, e.g. external gear pump as per data sheet 10089, 10091, 10093, 98243
3 Filling valve for accumulators, e.g. LT06 as per data sheet 66191
4 Accumulator, e.g. diaphragm accumulator as per data sheet 50150
5 Controller, e.g. BODAS controller as per data sheet 95205
6 Brake pedal, e.g. LTPME
7 Sensors, e.g. PR4 pressure sensor as per data sheet 95156
8 Parking brake valve

Further documentation

▶ Control electronics:		
– Valve amplifier for proportional valves	Type VT-SSPA1	Data sheet 30116
– Analog amplifier	Type RA	Data sheet 95230
– BODAS controller	Type RC	Data sheet 95204, 95205, 95206
▶ Proportional pressure reducing valve	Type DRET5SK	Data sheet 64667
▶ 3/2-way slide valve	Type KKDER1	Data sheet 18136-04
▶ BODAS pressure sensor	Type PR4	Data sheet 95156
▶ Mineral-oil based hydraulic fluids		Data sheet 90220
▶ Environmentally acceptable hydraulic fluids		Data sheet 90221

Bosch Rexroth Oil Control S.p.A.
Via Leonardo da Vinci 5
P.O. Box no. 5
41015 Nonantola – Modena, Italy
Tel. +39 059 887 611
Fax +39 059 547 848
compact-hydraulics-hic@boschrexroth.com
www.boschrexroth.com/compacthydraulics

© This document, as well as the data, specifications and other information set forth in it, are the exclusive property of Bosch Rexroth Oil Control S.p.a. It may not be reproduced or given to third parties without its consent. The data specified above only serve to describe the product. No statements concerning a certain condition or suitability for a certain application can be derived from our information. The information given does not release the user from the obligation of own judgment and verification. It must be remembered that our products are subject to a natural process of wear and aging. Subject to change.