CAVITIES AND TECHNICAL DRAWINGS

SAE-XX-3N

ATLANTIC Fluid Tech

Dimensions: mm [inches]

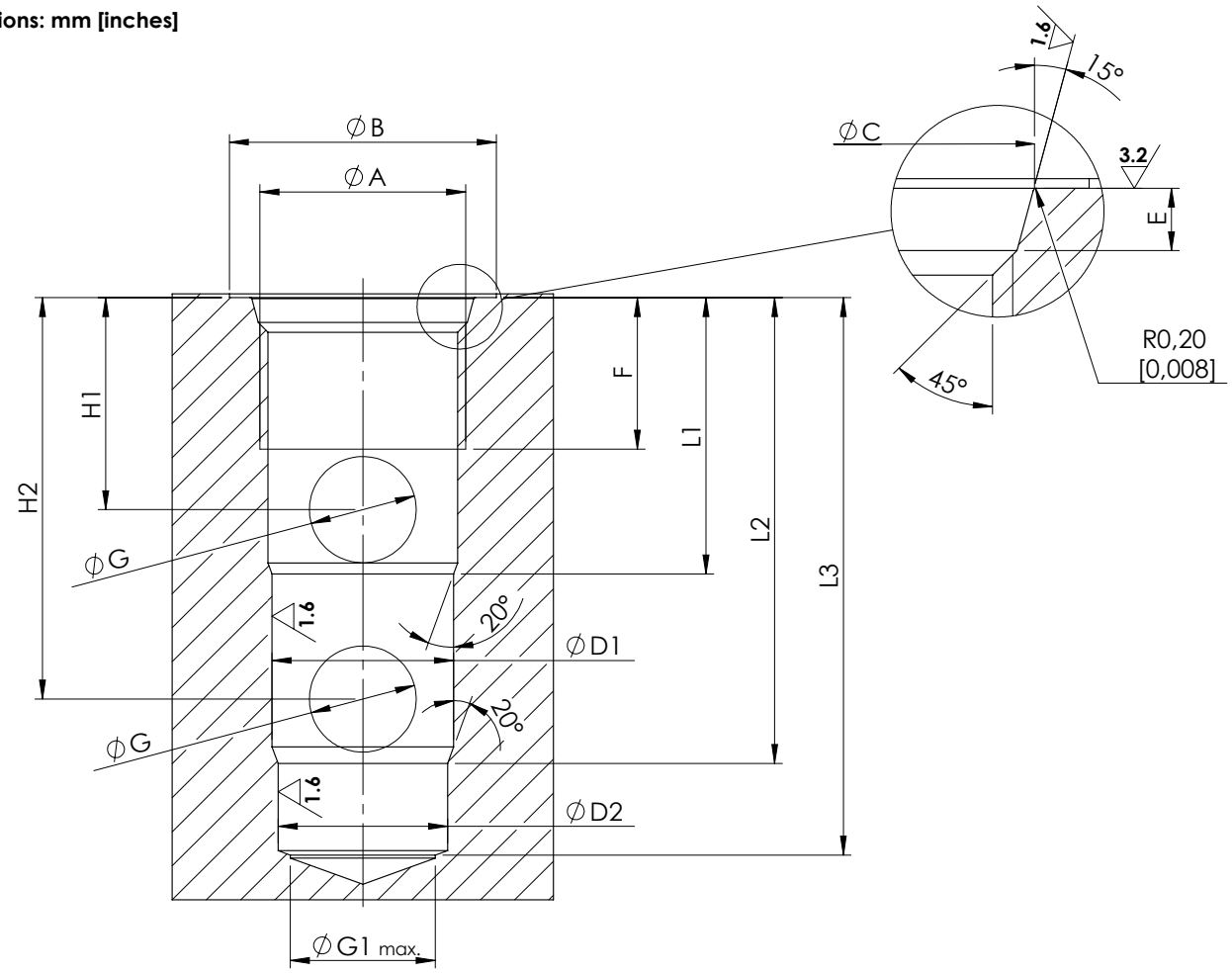

General tolerances : 0.3 mm [0,012 inches]

◎	0.03[0.0012]
⊥	0.02[0,0008]

	SAE-08-3N	SAE-10-3N	SAE-12-3N	SAE-16-3N	SAE-20-3N
A	3/4-16 UNF	7/8-14 UNF	1-1/16 12 UNF	1-5/16 12 UNF	1-5/8 12 UNF
B	26 [1,02]	30 [1,18]	35 [1,38]	42 [1,65]	48 [1,89]
C	20.6 $^{+0,1}_{0}$ [0,811 $^{+0,004}_{0}$]	23.9 $^{+0,1}_{0}$ [0,941 $^{+0,004}_{0}$]	29.2 $^{+0,1}_{0}$ [1,15 $^{+0,004}_{0}$]	35.5 $^{+0,1}_{0}$ [1,398 $^{+0,004}_{0}$]	43.5 $^{+0,1}_{0}$ [1,713 $^{+0,004}_{0}$]
D1	15.87 $^{+0,05}_{0}$ [0,625 $^{+0,002}_{0}$]	17.47 $^{+0,05}_{0}$ [0,688 $^{+0,002}_{0}$]	23.80 $^{+0,05}_{0}$ [0,937 $^{+0,002}_{0}$]	28.60 $^{+0,05}_{0}$ [1,126 $^{+0,002}_{0}$]	36.52 $^{+0,05}_{0}$ [1,438 $^{+0,002}_{0}$]
D2	14.27 $^{+0,05}_{0}$ [0,562 $^{+0,002}_{0}$]	15.87 $^{+0,05}_{0}$ [0,625 $^{+0,002}_{0}$]	22.22 $^{+0,05}_{0}$ [0,875 $^{+0,002}_{0}$]	27.00 $^{+0,05}_{0}$ [1,063 $^{+0,002}_{0}$]	33.35 $^{+0,05}_{0}$ [1,313 $^{+0,002}_{0}$]
E	2.6 $^{+0,3}_{0}$ [0,102 $^{+0,012}_{0}$]	2.6 $^{+0,3}_{0}$ [0,102 $^{+0,012}_{0}$]	3.3 $^{+0,3}_{0}$ [0,130 $^{+0,012}_{0}$]	3.3 $^{+0,3}_{0}$ [0,130 $^{+0,012}_{0}$]	3.4 $^{+0,3}_{0}$ [0,134 $^{+0,012}_{0}$]
F	13 [0,512]	14 [0,551]	20 [0,787]	20 [0,787]	22 [0,866]
G	6 [0,236]	8 [0,315]	14 [0,551]	17 [0,669]	25 [0,984]
G1	12 [0,472]	15 [0,591]	19 [0,748]	24 [0,945]	30 [1,181]
-	-	-	-	-	-
H1	15 [0,591]	18 [0,709]	28 [1,102]	25.5 [1,004]	32 [1,260]
H2	29 [1,142]	34 [1,339]	53 [2,087]	54 [2,126]	72 [2,835]
L1	19.50 [0,768]	23.5 [0,925]	36.5 [1,437]	35.5 [1,398]	46 [1,811]
L2	33.50 [1,319]	39.50 [1,555]	61.50 [2,421]	64 [2,520]	86 [3,386]
L3	43 [1,693]	48.50 [1,910]	73 [2,874]	75 [2,953]	100 [3,937]